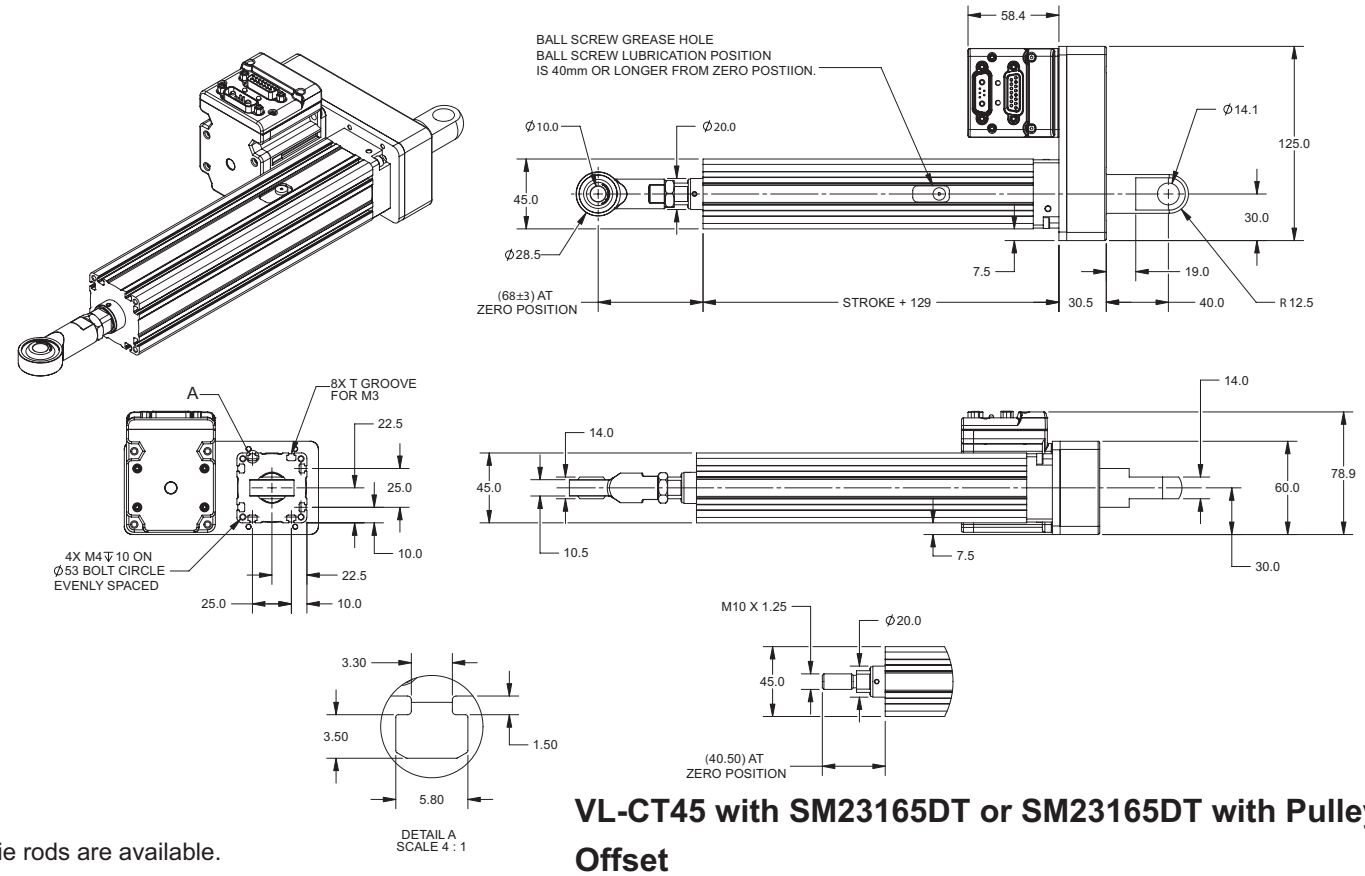

*Tie rods are available.

VL-CT45 with SM23165DT or SM23165DT with Pulley Offset

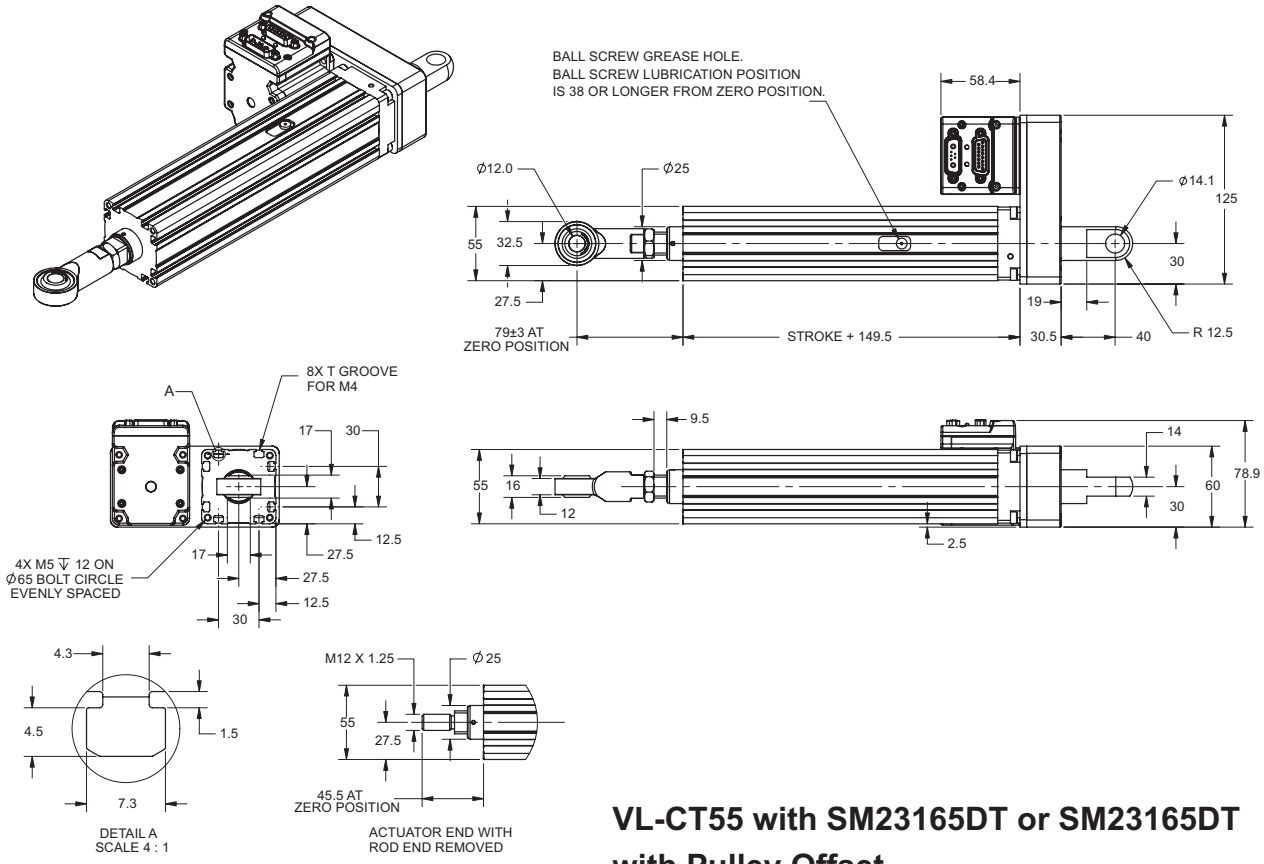

*Tie rods are available.

VL-CT55 with SM23165DT or SM23165DT with Pulley Offset